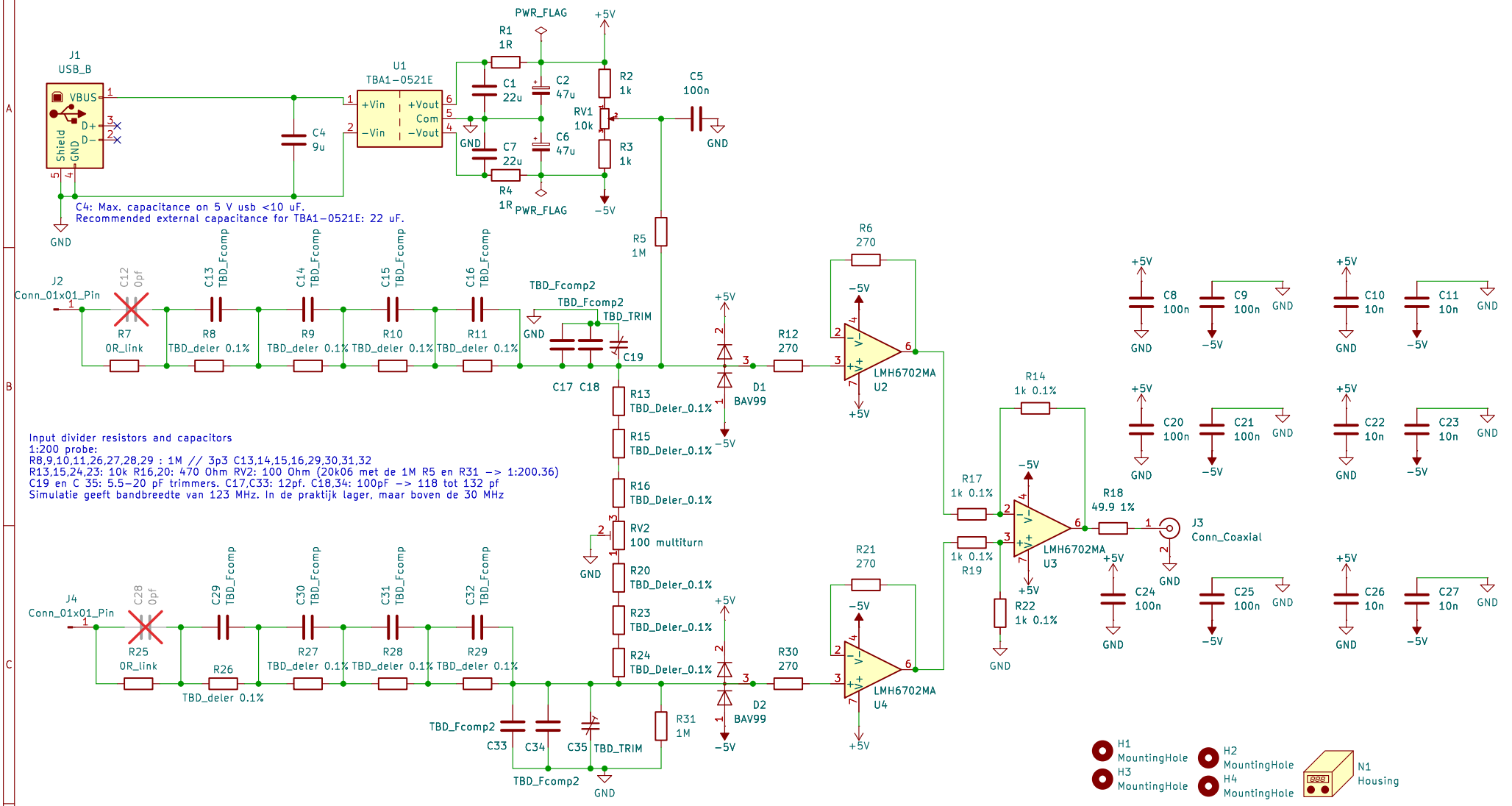

Sheet: /
File: diffprobe_LMH6702_elukeNL.kicad_sch

Title: Differentiële probe LMH6702

Size: A4	Date: 2024−11−20	Rev:
KiCad E.D.A. 9.0.3		Id: 1/1