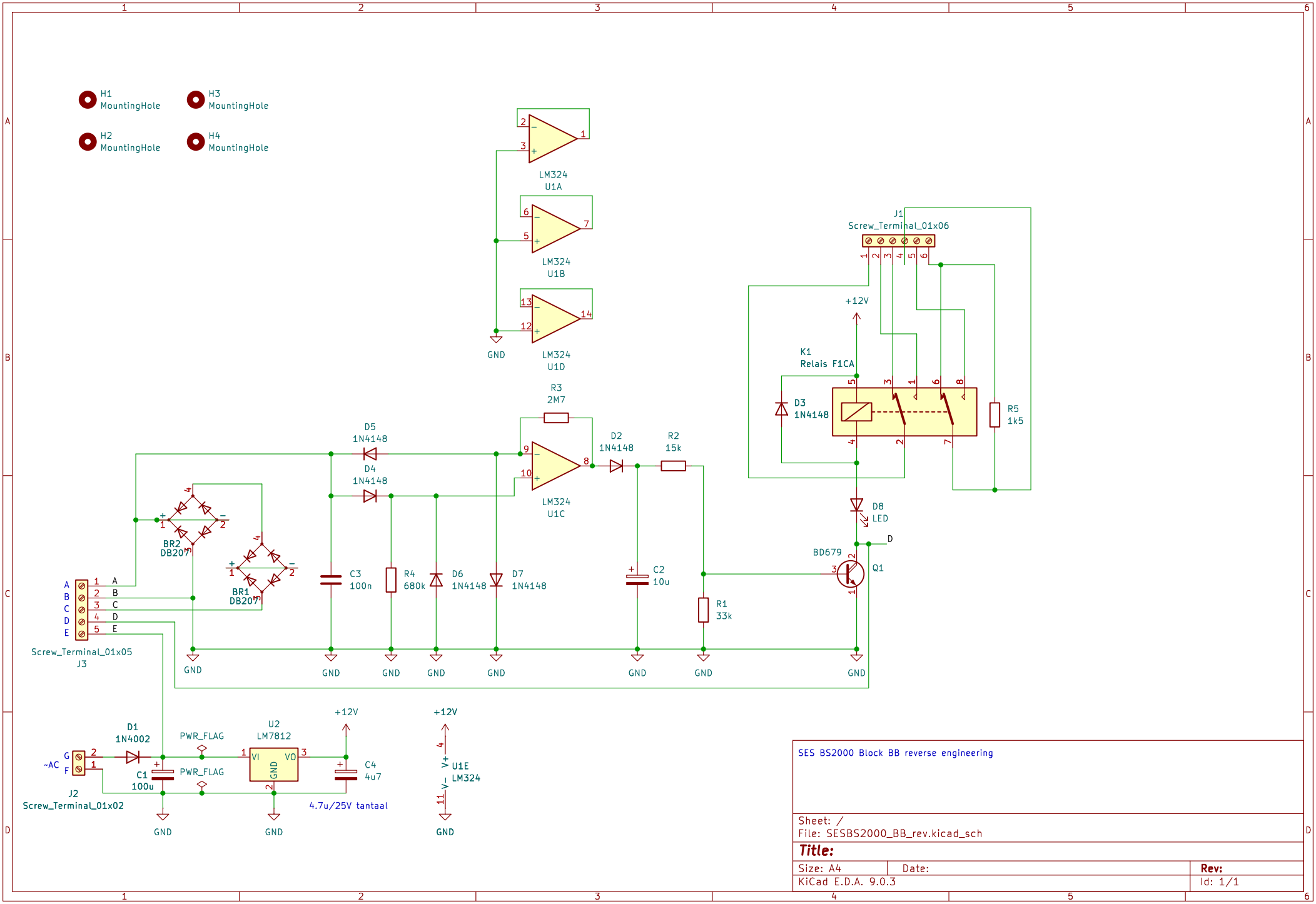
H1
MountingHole
H2
MountingHole
H3
MountingHole
H4
MountingHole
LM324
U1A
LM324
U1B
LM324
U1D
GND
R3
2M7
D5
1N4148
D4
1N4148
LM324
U1C
D2
1N4148
R2
15k
J1
Screw_Terminal_01x06
+12V
K1
Relais F1CA
D3
1N4148
R5
1k5
D8
LED
D
BD679
Q1
BR2
DB207
BR1
DB207
C3
100n
R4
680k
D6
1N4148
D7
1N4148
C2
10u
R1
33k
A
B
C
D
E
Screw_Terminal_01x05
J3
GND
D1
1N4002
PWR_FLAG
U2
LM7812
VI
VO
GND
C4
4u7
4.7u/25V tantaal
C1
100u
G
F
~AC
J2
Screw_Terminal_01x02
V+
V-
U1E
LM324
SES BS2000 Block BB reverse engineering
Sheet: /
File: SESBS2000_BB_rev.kicad_sch
Title:
Size: A4
Date:
Rev:
KiCad E.D.A. 9.0.3
Id: 1/1